# COMPUTACIÓN DIGITAL

## UNIDAD 1
## FUNDAMENTOS DE SISTEMAS DIGITALES

Ing. Marcelo Urbina. PhD.

Periodo 202650

# Objetivo

- Comprende y domina los fundamentos de los sistemas digitales.
- Analiza, sintetiza y diseña circuitos electrónicos combinacional y secuencial

# Contenido

- **Fundamentos de Sistemas Digitales**
  - Algebra de Boole y compuertas lógicas
  - Operaciones lógicas
  - Tablas de verdad
  - Compuertas lógicas
  - **Forma canónica SOP normalizada**
  - **Mapa de Karnaugh (fundamentos y ejemplos)**

# Mintérminos y maxtérminos

- Se denomina **mintérmino** o producto estándar a cada una de las $2^n$ posibles combinaciones de las n variables de entrada multiplicadas.

| A | B | C | Mintérmino | |
|---|---|---|---|---|
| 0 | 0 | 0 | $m_0$ | $\overline{A}\cdot\overline{B}\cdot\overline{C}$ |
| 0 | 0 | 1 | $m_1$ | $\overline{A}\cdot\overline{B}\cdot C$ |
| 0 | 1 | 0 | $m_2$ | $\overline{A}\cdot B\cdot\overline{C}$ |
| 0 | 1 | 1 | $m_3$ | $\overline{A}\cdot B\cdot C$ |
| 1 | 0 | 0 | $m_4$ | $A\cdot\overline{B}\cdot\overline{C}$ |
| 1 | 0 | 1 | $m_5$ | $A\cdot\overline{B}\cdot C$ |
| 1 | 1 | 0 | $m_6$ | $A\cdot B\cdot\overline{C}$ |
| 1 | 1 | 1 | $m_7$ | $A\cdot B\cdot C$ |

# Funciones SOP

**SOP o Suma de productos**: También conocida como expansión de minterminos.

$$f(a,b,c) = \bar{a}\cdot\bar{b}\cdot\bar{c} + a\cdot\bar{b}\cdot c + a\cdot b\cdot c$$

| a | b | c | f | |
|---|---|---|---|---|
| 0 | 0 | 0 | 1 | $\rightarrow \bar{a}\cdot\bar{b}\cdot\bar{c}$ |
| 0 | 0 | 1 | 0 | |
| 0 | 1 | 0 | 1 | $\rightarrow \bar{a}\cdot b\cdot\bar{c}$ |
| 0 | 1 | 1 | 0 | |
| 1 | 0 | 0 | 0 | |
| 1 | 0 | 1 | 0 | |
| 1 | 1 | 0 | 0 | |
| 1 | 1 | 1 | 1 | $\rightarrow a\cdot b\cdot c$ |

Relación con la tabla de verdad:

Cada mintérmino esta asociado con la línea de la tabla, tal que:

- Las variables que tienen **1** no están complementadas
- Las variable que tienen **0** aparecen complementadas

# Funciones SOP

La función booleana puede ser expresada en forma algebraica mediante una tabla de verdad, formando un mintérmino para cada combinación de variables que produce un 1 y después sumarlos generando así su expresión.

| A | B | C | Función F | | |
|---|---|---|---|---|---|
| 0 | 0 | 0 | $m_0$ | 1 | $\bar{A}\bar{B}\bar{C}$ |
| 0 | 0 | 1 | $m_1$ | 0 | |
| 0 | 1 | 0 | $m_2$ | 0 | |
| 0 | 1 | 1 | $m_3$ | 1 | $\bar{A}BC$ |
| 1 | 0 | 0 | $m_4$ | 0 | |
| 1 | 0 | 1 | $m_5$ | 1 | $A\bar{B}C$ |
| 1 | 1 | 0 | $m_6$ | 1 | $AB\bar{C}$ |
| 1 | 1 | 1 | $m_7$ | 0 | |

De modo que la función quedará expresada de la siguiente forma:

$$F = m_0 + m_3 + m_5 + m_6$$

$$F = \bar{A}\bar{B}\bar{C} + \bar{A}\mathrm{BC} + A\bar{B}\mathrm{C} + AB\bar{C}$$

Cuando la función booleana se encuentra expresada en suma de minterminos también suele usarse la siguiente notación:

$$F(A, B, C) = \Sigma(0, 3, 5, 6).$$

# Expansión a suma de productos

Basado en el uso repetitivo del teorema de unificación: **$X = XY + X\overline{Y}$**

| A | B | C | Mintérmino | |
|---|---|---|---|---|
| 0 | 0 | 0 | $m_0$ | $\overline{A}\cdot\overline{B}\cdot\overline{C}$ |
| 0 | 0 | 1 | $m_1$ | $\overline{A}\cdot\overline{B}\cdot C$ |
| 0 | 1 | 0 | $m_2$ | $\overline{A}\cdot B\cdot\overline{C}$ |
| 0 | 1 | 1 | $m_3$ | $\overline{A}\cdot B\cdot C$ |
| 1 | 0 | 0 | $m_4$ | $A\cdot\overline{B}\cdot\overline{C}$ |
| 1 | 0 | 1 | $m_5$ | $A\cdot\overline{B}\cdot C$ |
| 1 | 1 | 0 | $m_6$ | $A\cdot B\cdot\overline{C}$ |
| 1 | 1 | 1 | $m_7$ | $A\cdot B\cdot C$ |

Ejemplo: $F(A, B, C) = A + B\overline{C} + ABC$

Término A: $= AB + A\overline{B}$

$= (AB + A\,\overline{B})C + (AB + A\,\overline{B})\,\overline{C}$

$= ABC + A\,\overline{B}\,C + AB\,\overline{C} + A\,\overline{B}\,\overline{C}$

$= m7 + m5 + m6 + m4$

Término $B\,\overline{C}$ : $= AB\,\overline{C} + A'B\,\overline{C}$

$= m6 + m2$

Entonces, $F(A, B, C) = m2 + m4 + m5 + m6 + m7$

# Ejercicio

**Determine la función SOP, la mínima expresión y el circuito.**

| $x_1$ | $x_2$ | $x_3$ | $f(x_1, x_2, x_3)$ | Miniterminos |
|---|---|---|---|---|
| 0 | 0 | 0 | 0 | $m_0 = \bar{x}_1\bar{x}_2\bar{x}_3$ |
| 0 | 0 | 1 | 1 | $m_1 = \bar{x}_1\bar{x}_2x_3$ |
| 0 | 1 | 0 | 0 | $m_2 = \bar{x}_1x_2\bar{x}_3$ |
| 0 | 1 | 1 | 0 | $m_3 = \bar{x}_1x_2x_3$ |
| 1 | 0 | 0 | 1 | $m_4 = x_1\bar{x}_2\bar{x}_3$ |
| 1 | 0 | 1 | 1 | $m_5 = x_1\bar{x}_2x_3$ |
| 1 | 1 | 0 | 1 | $m_6 = x_1x_2\bar{x}_3$ |
| 1 | 1 | 1 | 0 | $m_7 = x_1x_2x_3$ |

$f(x_1, x_2, x_3) = m_1 + m_4 + m_5 + m_6$ $\quad \sum m(1,4,5,6)$

$= \bar{X}_1\,\bar{X}_2X_3 + X_1\,\bar{X}_2\,\bar{X}_3 + X_1\,\bar{X}_2X_3 + X_1X_2\,\bar{X}_3$

$= \bar{X}_2X_3\,(\bar{X}_1 + X_1) + X_1\,\bar{X}_3\,(\bar{X}_2 + X_2)$

$= \bar{X}_2X_3\,(1) + X_1\,\bar{X}_3\,(1)$

$= X_1\,\bar{X}_3 + \bar{X}_2X_3$

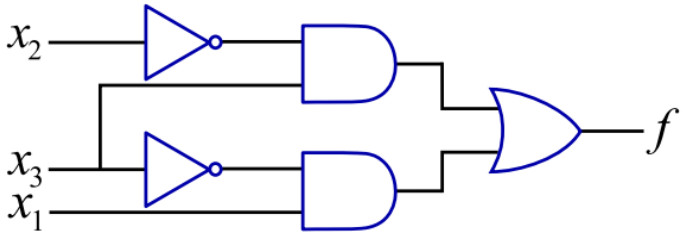


$f(x_1, x_2, x_3) = x_1\bar{x}_3 + \bar{x}_2x_3$

# OBTENER TABLA DE VERDAD A PARTIR DE ECUACION

$$S = \left[A \bullet \left(B + \overline{C}\right)\right] \bullet \overline{D}$$

| A | B | C | D | $\overline{C}$ | $B + \overline{C}$ | A·$(B + \overline{C})$ | $\overline{D}$ | [A·$(B + \overline{C})$] ·$\overline{D}$ |
|---|---|---|---|---|---|---|---|---|
| 0 | 0 | 0 | 0 | | | | | |
| 0 | 0 | 0 | 1 | | | | | |
| 0 | 0 | 1 | 0 | | | | | |
| 0 | 0 | 1 | 1 | | | | | |
| 0 | 1 | 0 | 0 | | | | | |
| 0 | 1 | 0 | 1 | | | | | |
| 0 | 1 | 1 | 0 | | | | | |
| 0 | 1 | 1 | 1 | | | | | |
| 1 | 0 | 0 | 0 | | | | | |
| 1 | 0 | 0 | 1 | | | | | |
| 1 | 0 | 1 | 0 | | | | | |
| 1 | 0 | 1 | 1 | | | | | |
| 1 | 1 | 0 | 0 | | | | | |
| 1 | 1 | 0 | 1 | | | | | |
| 1 | 1 | 1 | 0 | | | | | |
| 1 | 1 | 1 | 1 | | | | | |

# OBTENER TABLA DE VERDAD A PARTIR DE ECUACION

$$S = \left[A \bullet \left(B + \overline{C}\right)\right] \bullet \overline{D}$$

| A | B | C | D | $\overline{C}$ | $B + \overline{C}$ | A·$(B + \overline{C})$ | $\overline{D}$ | [A·$(B + \overline{C})$] ·$\overline{D}$ |
|---|---|---|---|---|---|---|---|---|
| 0 | 0 | 0 | 0 | 1 | 1 | 0 | 1 | 0 |
| 0 | 0 | 0 | 1 | 1 | 1 | 0 | 0 | 0 |
| 0 | 0 | 1 | 0 | 0 | 0 | 0 | 1 | 0 |
| 0 | 0 | 1 | 1 | 0 | 0 | 0 | 0 | 0 |
| 0 | 1 | 0 | 0 | 1 | 1 | 0 | 1 | 0 |
| 0 | 1 | 0 | 1 | 1 | 1 | 0 | 0 | 0 |
| 0 | 1 | 1 | 0 | 0 | 1 | 0 | 1 | 0 |
| 0 | 1 | 1 | 1 | 0 | 1 | 0 | 0 | 0 |
| 1 | 0 | 0 | 0 | 1 | 1 | 1 | 1 | 1 |
| 1 | 0 | 0 | 1 | 1 | 1 | 1 | 0 | 0 |
| 1 | 0 | 1 | 0 | 0 | 0 | 0 | 1 | 0 |
| 1 | 0 | 1 | 1 | 0 | 0 | 0 | 0 | 0 |
| 1 | 1 | 0 | 0 | 1 | 1 | 1 | 1 | 1 |
| 1 | 1 | 0 | 1 | 1 | 1 | 1 | 0 | 0 |
| 1 | 1 | 1 | 0 | 0 | 1 | 1 | 1 | 1 |
| 1 | 1 | 1 | 1 | 0 | 1 | 1 | 0 | 0 |

# OBTENER ECUACION A PARTIR DE CIRCUITO

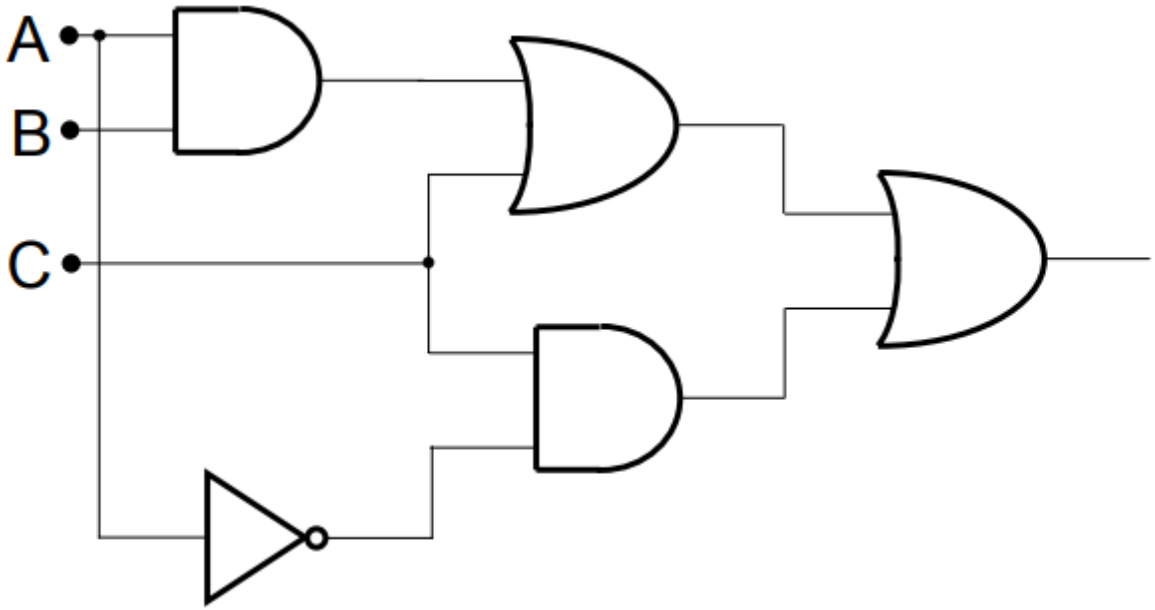

# OBTENER ECUACION A PARTIR DE CIRCUITO

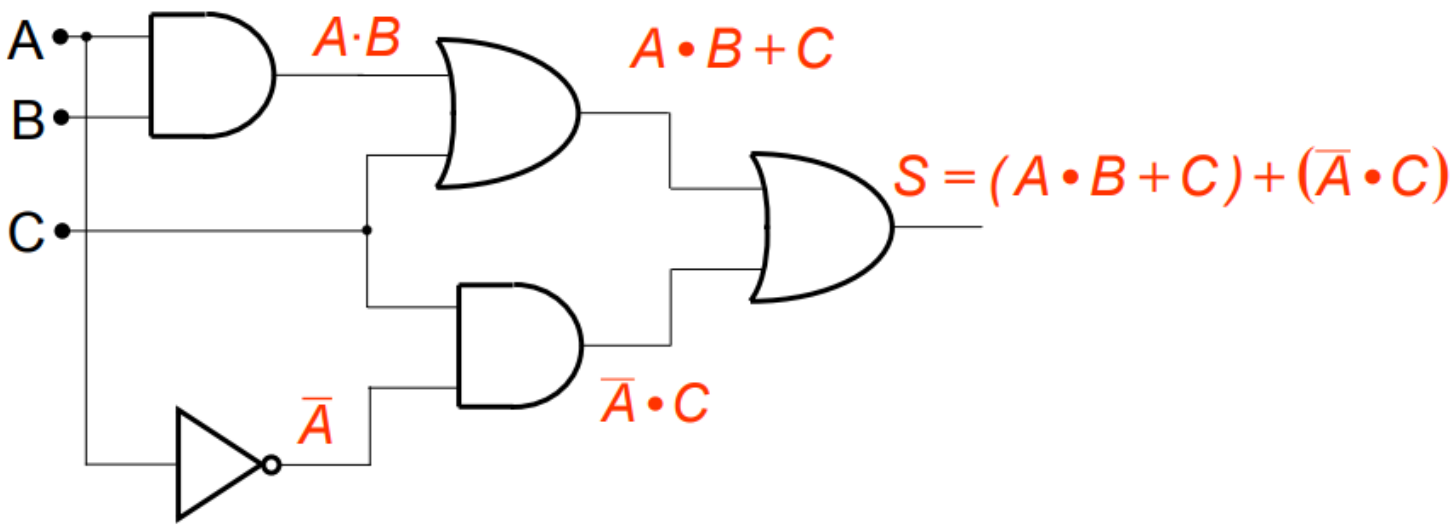

# OBTENER ECUACION A PARTIR DE CIRCUITO

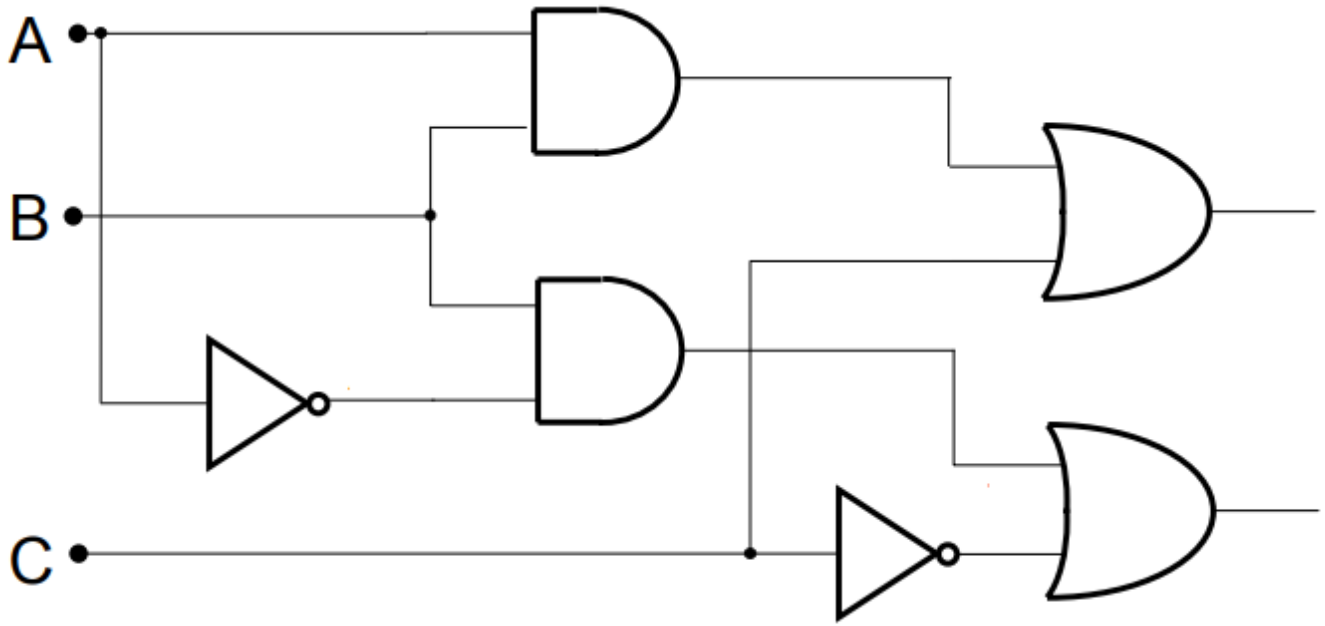

# OBTENER ECUACION A PARTIR DE CIRCUITO

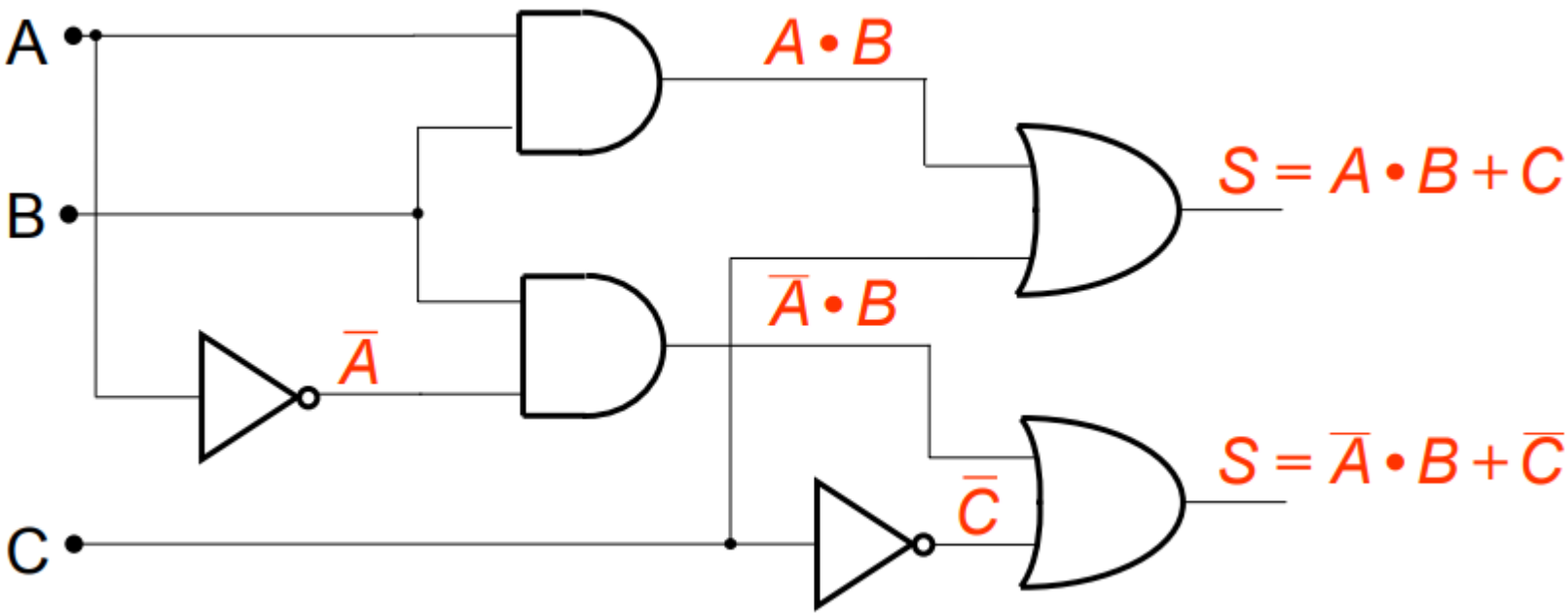

# OBTENER ECUACION A PARTIR DE TABLA DE VERDAD

Obtener ecuación en función de minterminos.

| A | B | C | S |
|---|---|---|---|
| 0 | 0 | 0 | |
| 0 | 0 | 1 | |
| 0 | 1 | 0 | |
| 0 | 1 | 1 | |
| 1 | 0 | 0 | |
| 1 | 0 | 1 | |
| 1 | 1 | 0 | |
| 1 | 1 | 1 | |

# OBTENER ECUACION A PARTIR DE TABLA DE VERDAD

Obtener ecuación en función de minterminos.

| A | B | C | S |
|---|---|---|---|
| 0 | 0 | 0 | 0 |
| 0 | 0 | 1 | 0 |
| 0 | 1 | 0 | 1 |
| 0 | 1 | 1 | 0 |
| 1 | 0 | 0 | 0 |
| 1 | 0 | 1 | 1 |
| 1 | 1 | 0 | 1 |
| 1 | 1 | 1 | 1 |

**Ecuación canónica**

$$S = \overline{A}B\overline{C} + AB\overline{C} + A\overline{B}C + ABC$$

**Ecuación genérica**

$$S = \sum (2, 3, 5, 7)$$

# TALLER

## Resolver los siguientes ejercicios.

**Determine la mínima expresión de la siguiente función:**

$$f(A,B,C) = \sum m(1,4,5)$$

**Deduzca la ecuación lógica y el diagrama de circuito para un circuito con tres entradas A, B y C. La salida será alta sólo cuando exactamente una de las entradas sea alta.**

**Obtener ecuación en función de minterminos, simplificar la función y dibujar el circuito resultante.**

**a.-** $Z = A.B + A.B.C$

**b.-** $Z = A.B.\overline{C} + \overline{\overline{A} + B + \overline{C}}$

**c.-** $Z = A.\overline{B} + \overline{A}.\overline{B}.\overline{C} + A.\overline{(B + C)} + A.\overline{B}.\overline{C}$

# Descripción, simplificación y lectura

- Un mapa de Karnaugh es una representación gráfica de una tabla de verdad, y por lo tanto existe una asociación unívoca entre ambas.
- La tabla de verdad tiene una fila por cada mintérmino, mientras que el mapa de Karnaugh tiene una celda por cada mintérmino.
- Emplearemos mapas de Karnaugh para la simplificación de ecuaciones de hasta cuatro variables.
- El número de celdas del mapa es $2^n$.
  - - n = variables

# Descripción, simplificación y lectura

- Mapas de Karnaugh de 2 variables

| A | B | Z | |
|---|---|---|---|
| 0 | 0 | 1 | 0 |
| 0 | 1 | 1 | 1 |
| 1 | 0 | 1 | 2 |
| 1 | 1 | 0 | 3 |

| | $\bar{B}$ 0 | $B$ 1 |
|---|---|---|
| $\bar{A}$ 0 | 1 0 | 1 1 |
| $A$ 1 | 1 2 | 0 3 |

# Descripción, simplificación y lectura

- Mapas de Karnaugh de 3 variables

| A | B | C | Z | |
|---|---|---|---|---|
| 0 | 0 | 0 | 1 | 0 |
| 0 | 0 | 1 | 1 | 1 |
| 0 | 1 | 0 | 1 | 2 |
| 0 | 1 | 1 | 1 | 3 |
| 1 | 0 | 0 | 0 | 4 |
| 1 | 0 | 1 | 0 | 5 |
| 1 | 1 | 0 | 0 | 6 |
| 1 | 1 | 1 | 1 | 7 |

| | $\bar{B}\bar{C}$ 00 | $\bar{B}C$ 01 | $BC$ 11 | $B\bar{C}$ 10 |
|---|---|---|---|---|
| $\bar{A}$ 0 | 0 | 1 | 3 | 2 |
| $A$ 1 | 4 | 5 | 7 | 6 |

# Descripción, simplificación y lectura

- Mapas de Karnaugh de 3 variables

| A | B | C | Z | |
|---|---|---|---|---|
| 0 | 0 | 0 | 1 | 0 |
| 0 | 0 | 1 | 1 | 1 |
| 0 | 1 | 0 | 1 | 2 |
| 0 | 1 | 1 | 1 | 3 |
| 1 | 0 | 0 | 0 | 4 |
| 1 | 0 | 1 | 0 | 5 |
| 1 | 1 | 0 | 0 | 6 |
| 1 | 1 | 1 | 1 | 7 |

| | $\bar{B}\bar{C}$ 00 | $\bar{B}C$ 01 | $BC$ 11 | $B\bar{C}$ 10 |
|---|---|---|---|---|
| $\bar{A}$ 0 | 0 | 1 | 3 | 2 |
| $A$ 1 | 4 | 5 | 7 | 6 |

# Descripción, simplificación y lectura

- Mapas de Karnaugh de 3 variables

| A | B | C | Z | |
|---|---|---|---|---|
| 0 | 0 | 0 | 1 | 0 |
| 0 | 0 | 1 | 1 | 1 |
| 0 | 1 | 0 | 1 | 2 |
| 0 | 1 | 1 | 1 | 3 |
| 1 | 0 | 0 | 0 | 4 |
| 1 | 0 | 1 | 0 | 5 |
| 1 | 1 | 0 | 0 | 6 |
| 1 | 1 | 1 | 1 | 7 |

| | $\bar{B}\bar{C}$ 00 | $\bar{B}C$ 01 | $BC$ 11 | $B\bar{C}$ 10 |
|---|---|---|---|---|
| $\bar{A}$ 0 | 1 0 | 1 1 | 1 3 | 1 2 |
| $A$ 1 | 4 | 5 | 7 | 6 |

# Descripción, simplificación y lectura

- Mapas de Karnaugh de 3 variables

| A | B | C | Z | |
|---|---|---|---|---|
| 0 | 0 | 0 | 1 | 0 |
| 0 | 0 | 1 | 1 | 1 |
| 0 | 1 | 0 | 1 | 2 |
| 0 | 1 | 1 | 1 | 3 |
| 1 | 0 | 0 | 0 | 4 |
| 1 | 0 | 1 | 0 | 5 |
| 1 | 1 | 0 | 0 | 6 |
| 1 | 1 | 1 | 1 | 7 |

| | $\bar{B}\bar{C}$ 00 | $\bar{B}C$ 01 | $BC$ 11 | $B\bar{C}$ 10 |
|---|---|---|---|---|
| $\bar{A}$ 0 | 1 0 | 1 1 | 1 3 | 1 2 |
| $A$ 1 | 0 4 | 0 5 | 1 7 | 0 6 |

# • Mapas de Karnaugh de 4 variables

| A | B | C | D | F | |
|---|---|---|---|---|---|
| 0 | 0 | 0 | 0 | **0** | 0 |
| 0 | 0 | 0 | 1 | **0** | 1 |
| 0 | 0 | 1 | 0 | **0** | 2 |
| 0 | 0 | 1 | 1 | **1** | 3 |
| 0 | 1 | 0 | 0 | **1** | 4 |
| 0 | 1 | 0 | 1 | **1** | 5 |
| 0 | 1 | 1 | 0 | **0** | 6 |
| 0 | 1 | 1 | 1 | **1** | 7 |
| 1 | 0 | 0 | 0 | **0** | 8 |
| 1 | 0 | 0 | 1 | **1** | 9 |
| 1 | 0 | 1 | 0 | **0** | 10 |
| 1 | 0 | 1 | 1 | **0** | 11 |
| 1 | 1 | 0 | 0 | **0** | 12 |
| 1 | 1 | 0 | 1 | **1** | 13 |
| 1 | 1 | 1 | 0 | **1** | 14 |
| 1 | 1 | 1 | 1 | **1** | 15 |

| | $\bar{C}\bar{D}$ **00** | $\bar{C}D$ **01** | $CD$ **11** | $C\bar{D}$ **10** |
|---|---|---|---|---|
| $\bar{A}\bar{B}$ **00** | 0 | 1 | 3 | 2 |
| $\bar{A}B$ **01** | 4 | 5 | 7 | 6 |
| $AB$ **11** | 12 | 13 | 15 | 14 |
| $A\bar{B}$ **10** | 8 | 9 | 11 | 10 |

# • Mapas de Karnaugh de 4 variables

| A | B | C | D | F | |
|---|---|---|---|---|---|
| 0 | 0 | 0 | 0 | **0** | 0 |
| 0 | 0 | 0 | 1 | **0** | 1 |
| 0 | 0 | 1 | 0 | **0** | 2 |
| 0 | 0 | 1 | 1 | **1** | 3 |
| 0 | 1 | 0 | 0 | **1** | 4 |
| 0 | 1 | 0 | 1 | **1** | 5 |
| 0 | 1 | 1 | 0 | **0** | 6 |
| 0 | 1 | 1 | 1 | **1** | 7 |
| 1 | 0 | 0 | 0 | **0** | 8 |
| 1 | 0 | 0 | 1 | **1** | 9 |
| 1 | 0 | 1 | 0 | **0** | 10 |
| 1 | 0 | 1 | 1 | **0** | 11 |
| 1 | 1 | 0 | 0 | **0** | 12 |
| 1 | 1 | 0 | 1 | **1** | 13 |
| 1 | 1 | 1 | 0 | **1** | 14 |
| 1 | 1 | 1 | 1 | **1** | 15 |

| | $\bar{C}\bar{D}$ **00** | $\bar{C}D$ **01** | $CD$ **11** | $C\bar{D}$ **10** |
|---|---|---|---|---|
| $\bar{A}\bar{B}$ **00** | 0 | 1 | 3 | 2 |
| $\bar{A}B$ **01** | 4 | 5 | 7 | 6 |
| $AB$ **11** | 12 | 13 | 15 | 14 |
| $A\bar{B}$ **10** | 8 | 9 | 11 | 10 |

# • Mapas de Karnaugh de 4 variables

| A | B | C | D | F | |
|---|---|---|---|---|---|
| 0 | 0 | 0 | 0 | **0** | 0 |
| 0 | 0 | 0 | 1 | **0** | 1 |
| 0 | 0 | 1 | 0 | **0** | 2 |
| 0 | 0 | 1 | 1 | **1** | 3 |
| 0 | 1 | 0 | 0 | **1** | 4 |
| 0 | 1 | 0 | 1 | **1** | 5 |
| 0 | 1 | 1 | 0 | **0** | 6 |
| 0 | 1 | 1 | 1 | **1** | 7 |
| 1 | 0 | 0 | 0 | **0** | 8 |
| 1 | 0 | 0 | 1 | **1** | 9 |
| 1 | 0 | 1 | 0 | **0** | 10 |
| 1 | 0 | 1 | 1 | **0** | 11 |
| 1 | 1 | 0 | 0 | **0** | 12 |
| 1 | 1 | 0 | 1 | **1** | 13 |
| 1 | 1 | 1 | 0 | **1** | 14 |
| 1 | 1 | 1 | 1 | **1** | 15 |

| | $\bar{C}\bar{D}$ **00** | $\bar{C}D$ **01** | $CD$ **11** | $C\bar{D}$ **10** |
|---|---|---|---|---|
| $\bar{A}\bar{B}$ **00** | 0 0 | 0 1 | 1 3 | 0 2 |
| $\bar{A}B$ **01** | 4 | 5 | 7 | 6 |
| $AB$ **11** | 12 | 13 | 15 | 14 |
| $A\bar{B}$ **10** | 8 | 9 | 11 | 10 |

# • Mapas de Karnaugh de 4 variables

| A | B | C | D | F | |
|---|---|---|---|---|---|
| 0 | 0 | 0 | 0 | **0** | 0 |
| 0 | 0 | 0 | 1 | **0** | 1 |
| 0 | 0 | 1 | 0 | **0** | 2 |
| 0 | 0 | 1 | 1 | **1** | 3 |
| 0 | 1 | 0 | 0 | **1** | 4 |
| 0 | 1 | 0 | 1 | **1** | 5 |
| 0 | 1 | 1 | 0 | **0** | 6 |
| 0 | 1 | 1 | 1 | **1** | 7 |
| 1 | 0 | 0 | 0 | **0** | 8 |
| 1 | 0 | 0 | 1 | **1** | 9 |
| 1 | 0 | 1 | 0 | **0** | 10 |
| 1 | 0 | 1 | 1 | **0** | 11 |
| 1 | 1 | 0 | 0 | **0** | 12 |
| 1 | 1 | 0 | 1 | **1** | 13 |
| 1 | 1 | 1 | 0 | **1** | 14 |
| 1 | 1 | 1 | 1 | **1** | 15 |

| | $\bar{C}\bar{D}$ **00** | $\bar{C}D$ **01** | $CD$ **11** | $C\bar{D}$ **10** |
|---|---|---|---|---|
| $\bar{A}\bar{B}$ **00** | 0 0 | 0 1 | 1 3 | 0 2 |
| $\bar{A}B$ **01** | 1 4 | 1 5 | 1 7 | 0 6 |
| $AB$ **11** | 12 | 13 | 15 | 14 |
| $A\bar{B}$ **10** | 8 | 9 | 11 | 10 |

# • Mapas de Karnaugh de 4 variables

| A | B | C | D | F | |
|---|---|---|---|---|---|
| 0 | 0 | 0 | 0 | **0** | 0 |
| 0 | 0 | 0 | 1 | **0** | 1 |
| 0 | 0 | 1 | 0 | **0** | 2 |
| 0 | 0 | 1 | 1 | **1** | 3 |
| 0 | 1 | 0 | 0 | **1** | 4 |
| 0 | 1 | 0 | 1 | **1** | 5 |
| 0 | 1 | 1 | 0 | **0** | 6 |
| 0 | 1 | 1 | 1 | **1** | 7 |
| 1 | 0 | 0 | 0 | **0** | 8 |
| 1 | 0 | 0 | 1 | **1** | 9 |
| 1 | 0 | 1 | 0 | **0** | 10 |
| 1 | 0 | 1 | 1 | **0** | 11 |
| 1 | 1 | 0 | 0 | **0** | 12 |
| 1 | 1 | 0 | 1 | **1** | 13 |
| 1 | 1 | 1 | 0 | **1** | 14 |
| 1 | 1 | 1 | 1 | **1** | 15 |

| | $\bar{C}\bar{D}$ **00** | $\bar{C}D$ **01** | $CD$ **11** | $C\bar{D}$ **10** |
|---|---|---|---|---|
| $\bar{A}\bar{B}$ **00** | 0 (0) | 0 (1) | 1 (3) | 0 (2) |
| $\bar{A}B$ **01** | 1 (4) | 1 (5) | 1 (7) | 0 (6) |
| $AB$ **11** | (12) | (13) | (15) | (14) |
| $A\bar{B}$ **10** | 0 (8) | 1 (9) | 0 (11) | 0 (10) |

# • Mapas de Karnaugh de 4 variables

| A | B | C | D | F | |
|---|---|---|---|---|---|
| 0 | 0 | 0 | 0 | **0** | 0 |
| 0 | 0 | 0 | 1 | **0** | 1 |
| 0 | 0 | 1 | 0 | **0** | 2 |
| 0 | 0 | 1 | 1 | **1** | 3 |
| 0 | 1 | 0 | 0 | **1** | 4 |
| 0 | 1 | 0 | 1 | **1** | 5 |
| 0 | 1 | 1 | 0 | **0** | 6 |
| 0 | 1 | 1 | 1 | **1** | 7 |
| 1 | 0 | 0 | 0 | **0** | 8 |
| 1 | 0 | 0 | 1 | **1** | 9 |
| 1 | 0 | 1 | 0 | **0** | 10 |
| 1 | 0 | 1 | 1 | **0** | 11 |
| 1 | 1 | 0 | 0 | **0** | 12 |
| 1 | 1 | 0 | 1 | **1** | 13 |
| 1 | 1 | 1 | 0 | **1** | 14 |
| 1 | 1 | 1 | 1 | **1** | 15 |

| | $\bar{C}\bar{D}$ **00** | $\bar{C}D$ **01** | $CD$ **11** | $C\bar{D}$ **10** |
|---|---|---|---|---|
| $\bar{A}\bar{B}$ **00** | 0 $_{0}$ | 0 $_{1}$ | 1 $_{3}$ | 0 $_{2}$ |
| $\bar{A}B$ **01** | 1 $_{4}$ | 1 $_{5}$ | 1 $_{7}$ | 0 $_{6}$ |
| $AB$ **11** | 0 $_{12}$ | 1 $_{13}$ | 1 $_{15}$ | 1 $_{14}$ |
| $A\bar{B}$ **10** | 0 $_{8}$ | 1 $_{9}$ | 0 $_{11}$ | 0 $_{10}$ |

# Descripción, simplificación y lectura

**Procedemos a la simplificación:**

- Agrupamos los unos (según criterios que se indican a continuación).
- Obtenemos el término correspondiente a cada grupo.
- Para simplificar, en cada grupo desaparece la variable que cambia de nivel.

# Descripción, simplificación y lectura

Agrupamos los unos en bloques de.

- 8 unos
- 4 unos
- 2 unos

Los que no puedan ser agrupados, se consideran “1” aislados o independientes.
Un “1” puede formar parte de varios grupos.
Finaliza la agrupación cuando no queda ningún “1” libre.

# Descripción, simplificación y lectura

## Agrupaciones de ocho unos

| | $\bar{C}\bar{D}$ | $\bar{C}D$ | $CD$ | $C\bar{D}$ |
|---|---|---|---|---|
| $\bar{A}\bar{B}$ | 1 | 1 | 1 | 1 |
| $\bar{A}B$ | 1 | 1 | 1 | 1 |
| $AB$ | 1 | 1 | 0 | 1 |
| $A\bar{B}$ | 1 | 1 | 1 | 1 |

| | $\bar{C}\bar{D}$ | $\bar{C}D$ | $CD$ | $C\bar{D}$ |
|---|---|---|---|---|
| $\bar{A}\bar{B}$ | 1 | 1 | 1 | 1 |
| $\bar{A}B$ | 1 | 1 | 1 | 1 |
| $AB$ | 1 | 1 | 0 | 1 |
| $A\bar{B}$ | 1 | 1 | 1 | 1 |

# Descripción, simplificación y lectura

## Agrupaciones de ocho unos

| | $\bar{C}\bar{D}$ | $\bar{C}D$ | $CD$ | $C\bar{D}$ |
|---|---|---|---|---|
| $\bar{A}\bar{B}$ | 1 | 1 | 1 | 1 |
| $\bar{A}B$ | 1 | 1 | 1 | 1 |
| $AB$ | 1 | 1 | 0 | 1 |
| $A\bar{B}$ | 1 | 1 | 1 | 1 |

| | $\bar{C}\bar{D}$ | $\bar{C}D$ | $CD$ | $C\bar{D}$ |
|---|---|---|---|---|
| $\bar{A}\bar{B}$ | 1 | 1 | 1 | 1 |
| $\bar{A}B$ | 1 | 1 | 1 | 1 |
| $AB$ | 1 | 1 | 0 | 1 |
| $A\bar{B}$ | 1 | 1 | 1 | 1 |

# Descripción, simplificación y lectura

## Agrupaciones de cuatro unos

| | $\bar{C}\bar{D}$ | $\bar{C}D$ | $CD$ | $C\bar{D}$ |
|---|---|---|---|---|
| $\bar{A}\bar{B}$ | 1 | 1 | 0 | 1 |
| $\bar{A}B$ | 1 | 1 | 1 | 1 |
| $AB$ | 0 | 0 | 1 | 1 |
| $A\bar{B}$ | 1 | 1 | 0 | 1 |

# Descripción, simplificación y lectura

## Agrupaciones de cuatro unos

| | $\bar{C}\bar{D}$ | $\bar{C}D$ | $CD$ | $C\bar{D}$ |
|---|---|---|---|---|
| $\bar{A}\bar{B}$ | 1 | 1 | 0 | 1 |
| $\bar{A}B$ | 1 | 1 | 1 | 1 |
| $AB$ | 0 | 0 | 1 | 1 |
| $A\bar{B}$ | 1 | 1 | 0 | 1 |

# Descripción, simplificación y lectura

Agrupaciones de cuatro unos

| | $\bar{C}\bar{D}$ | $\bar{C}D$ | $CD$ | $C\bar{D}$ |
|---|---|---|---|---|
| $\bar{A}\bar{B}$ | 1 | 1 | 0 | 1 |
| $\bar{A}B$ | 1 | 1 | 1 | 1 |
| $AB$ | 0 | 0 | 1 | 1 |
| $A\bar{B}$ | 1 | 1 | 0 | 1 |

# Descripción, simplificación y lectura

Agrupaciones de cuatro unos

| | $\bar{C}\bar{D}$ | $\bar{C}D$ | $CD$ | $C\bar{D}$ |
|---|---|---|---|---|
| $\bar{A}\bar{B}$ | 1 | 1 | 0 | 1 |
| $\bar{A}B$ | 1 | 1 | 1 | 1 |
| $AB$ | 0 | 0 | 1 | 1 |
| $A\bar{B}$ | 1 | 1 | 0 | 1 |

# Descripción, simplificación y lectura

## Agrupaciones de cuatro unos

| | $\bar{C}\bar{D}$ | $\bar{C}D$ | $CD$ | $C\bar{D}$ |
|---|---|---|---|---|
| $\bar{A}\bar{B}$ | 1 | 1 | 0 | 1 |
| $\bar{A}B$ | 1 | 1 | 1 | 1 |
| $AB$ | 0 | 0 | 1 | 1 |
| $A\bar{B}$ | 1 | 1 | 0 | 1 |

# Descripción, simplificación y lectura

## Agrupaciones de dos unos

| | $\bar{C}\bar{D}$ | $\bar{C}D$ | $CD$ | $C\bar{D}$ |
|---|---|---|---|---|
| $\bar{A}\bar{B}$ | 1 | 1 | 0 | 0 |
| $\bar{A}B$ | 1 | 0 | 1 | 1 |
| $AB$ | 0 | 1 | 1 | 0 |
| $A\bar{B}$ | 1 | 0 | 0 | 1 |

| | $\bar{C}\bar{D}$ | $\bar{C}D$ | $CD$ | $C\bar{D}$ |
|---|---|---|---|---|
| $\bar{A}\bar{B}$ | 1 | 1 | 0 | 0 |
| $\bar{A}B$ | 1 | 0 | 1 | 1 |
| $AB$ | 0 | 1 | 1 | 0 |
| $A\bar{B}$ | 1 | 0 | 0 | 1 |

# Descripción, simplificación y lectura

## Agrupaciones de dos unos

| | $\bar{C}\bar{D}$ | $\bar{C}D$ | $CD$ | $C\bar{D}$ |
|---|---|---|---|---|
| $\bar{A}\bar{B}$ | 1 | 1 | 0 | 0 |
| $\bar{A}B$ | 1 | 0 | 1 | 1 |
| $AB$ | 0 | 1 | 1 | 0 |
| $A\bar{B}$ | 1 | 0 | 0 | 1 |

| | $\bar{C}\bar{D}$ | $\bar{C}D$ | $CD$ | $C\bar{D}$ |
|---|---|---|---|---|
| $\bar{A}\bar{B}$ | 1 | 1 | 0 | 0 |
| $\bar{A}B$ | 1 | 0 | 1 | 1 |
| $AB$ | 0 | 1 | 1 | 0 |
| $A\bar{B}$ | 1 | 0 | 0 | 1 |

# Descripción, simplificación y lectura

## Unos independientes

| | $\bar{C}\bar{D}$ | $\bar{C}D$ | $CD$ | $C\bar{D}$ |
|---|---|---|---|---|
| $\bar{A}\bar{B}$ | 1 | 0 | 0 | 0 |
| $\bar{A}B$ | 0 | 0 | 1 | 0 |
| $AB$ | 0 | 1 | 0 | 0 |
| $A\bar{B}$ | 0 | 0 | 0 | 1 |

# Mapas de Karnaugh: Ejemplo

| A | B | C | D | F |
|---|---|---|---|---|
| 0 | 0 | 0 | 0 | **0** |
| 0 | 0 | 0 | 1 | **1** |
| 0 | 0 | 1 | 0 | **1** |
| 0 | 0 | 1 | 1 | **1** |
| 0 | 1 | 0 | 0 | **0** |
| 0 | 1 | 0 | 1 | **1** |
| 0 | 1 | 1 | 0 | **1** |
| 0 | 1 | 1 | 1 | **0** |
| 1 | 0 | 0 | 0 | **1** |
| 1 | 0 | 0 | 1 | **1** |
| 1 | 0 | 1 | 0 | **1** |
| 1 | 0 | 1 | 1 | **1** |
| 1 | 1 | 0 | 0 | **1** |
| 1 | 1 | 0 | 1 | **1** |
| 1 | 1 | 1 | 0 | **1** |
| 1 | 1 | 1 | 1 | **1** |

| | $\bar{C}\bar{D}$ **00** | $\bar{C}D$ **01** | $CD$ **11** | $C\bar{D}$ **10** |
|---|---|---|---|---|
| $\bar{A}\bar{B}$ **00** | | | | |
| $\bar{A}B$ **01** | | | | |
| $AB$ **11** | | | | |
| $A\bar{B}$ **10** | | | | |

# Mapas de Karnaugh: Ejemplo

| A | B | C | D | F |
|---|---|---|---|---|
| 0 | 0 | 0 | 0 | **0** |
| 0 | 0 | 0 | 1 | **1** |
| 0 | 0 | 1 | 0 | **1** |
| 0 | 0 | 1 | 1 | **1** |
| 0 | 1 | 0 | 0 | **0** |
| 0 | 1 | 0 | 1 | **1** |
| 0 | 1 | 1 | 0 | **1** |
| 0 | 1 | 1 | 1 | **0** |
| 1 | 0 | 0 | 0 | **1** |
| 1 | 0 | 0 | 1 | **1** |
| 1 | 0 | 1 | 0 | **1** |
| 1 | 0 | 1 | 1 | **1** |
| 1 | 1 | 0 | 0 | **1** |
| 1 | 1 | 0 | 1 | **1** |
| 1 | 1 | 1 | 0 | **1** |
| 1 | 1 | 1 | 1 | **1** |

| | $\bar{C}\bar{D}$ 00 | $\bar{C}D$ 01 | $CD$ 11 | $C\bar{D}$ 10 |
|---|---|---|---|---|
| $\bar{A}\bar{B}$ 00 | | | | |
| $\bar{A}B$ 01 | | | | |
| $AB$ 11 | | | | |
| $A\bar{B}$ 10 | | | | |

# Mapas de Karnaugh: Ejemplo

| A | B | C | D | F |
|---|---|---|---|---|
| 0 | 0 | 0 | 0 | **0** |
| 0 | 0 | 0 | 1 | **1** |
| 0 | 0 | 1 | 0 | **1** |
| 0 | 0 | 1 | 1 | **1** |
| 0 | 1 | 0 | 0 | **0** |
| 0 | 1 | 0 | 1 | **1** |
| 0 | 1 | 1 | 0 | **1** |
| 0 | 1 | 1 | 1 | **0** |
| 1 | 0 | 0 | 0 | **1** |
| 1 | 0 | 0 | 1 | **1** |
| 1 | 0 | 1 | 0 | **1** |
| 1 | 0 | 1 | 1 | **1** |
| 1 | 1 | 0 | 0 | **1** |
| 1 | 1 | 0 | 1 | **1** |
| 1 | 1 | 1 | 0 | **1** |
| 1 | 1 | 1 | 1 | **1** |

| | $\bar{C}\bar{D}$ 00 | $\bar{C}D$ 01 | $CD$ 11 | $C\bar{D}$ 10 |
|---|---|---|---|---|
| $\bar{A}\bar{B}$ 00 | 0 | 1 | 1 | 1 |
| $\bar{A}B$ 01 | 0 | 1 | 0 | 1 |
| $AB$ 11 | 1 | 1 | 1 | 1 |
| $A\bar{B}$ 10 | 1 | 1 | 1 | 1 |

# Mapas de Karnaugh: Ejemplo

| A | B | C | D | F |
|---|---|---|---|---|
| 0 | 0 | 0 | 0 | **0** |
| 0 | 0 | 0 | 1 | **1** |
| 0 | 0 | 1 | 0 | **1** |
| 0 | 0 | 1 | 1 | **1** |
| 0 | 1 | 0 | 0 | **0** |
| 0 | 1 | 0 | 1 | **1** |
| 0 | 1 | 1 | 0 | **1** |
| 0 | 1 | 1 | 1 | **0** |
| 1 | 0 | 0 | 0 | **1** |
| 1 | 0 | 0 | 1 | **1** |
| 1 | 0 | 1 | 0 | **1** |
| 1 | 0 | 1 | 1 | **1** |
| 1 | 1 | 0 | 0 | **1** |
| 1 | 1 | 0 | 1 | **1** |
| 1 | 1 | 1 | 0 | **1** |
| 1 | 1 | 1 | 1 | **1** |

| | $\bar{C}\bar{D}$ 00 | $\bar{C}D$ 01 | $CD$ 11 | $C\bar{D}$ 10 |
|---|---|---|---|---|
| $\bar{A}\bar{B}$ 00 | 0 | 1 | 1 | 1 |
| $\bar{A}B$ 01 | 0 | 1 | 0 | 1 |
| $AB$ 11 | 1 | 1 | 1 | 1 |
| $A\bar{B}$ 10 | 1 | 1 | 1 | 1 |

# Mapas de Karnaugh: Ejemplo

| A | B | C | D | F |
|---|---|---|---|---|
| 0 | 0 | 0 | 0 | **0** |
| 0 | 0 | 0 | 1 | **1** |
| 0 | 0 | 1 | 0 | **1** |
| 0 | 0 | 1 | 1 | **1** |
| 0 | 1 | 0 | 0 | **0** |
| 0 | 1 | 0 | 1 | **1** |
| 0 | 1 | 1 | 0 | **1** |
| 0 | 1 | 1 | 1 | **0** |
| 1 | 0 | 0 | 0 | **1** |
| 1 | 0 | 0 | 1 | **1** |
| 1 | 0 | 1 | 0 | **1** |
| 1 | 0 | 1 | 1 | **1** |
| 1 | 1 | 0 | 0 | **1** |
| 1 | 1 | 0 | 1 | **1** |
| 1 | 1 | 1 | 0 | **1** |
| 1 | 1 | 1 | 1 | **1** |

## Solución 1

| | $\bar{C}\bar{D}$ 00 | $\bar{C}D$ 01 | $CD$ 11 | $C\bar{D}$ 10 |
|---|---|---|---|---|
| $\bar{A}\bar{B}$ 00 | 0 | 1 | 1 | 1 |
| $\bar{A}B$ 01 | 0 | 1 | 0 | 1 |
| $AB$ 11 | 1 | 1 | 1 | 1 |
| $A\bar{B}$ 10 | 1 | 1 | 1 | 1 |

Salida

$$F(A,B,C) = A + C\overline{D} + \overline{C}D + \overline{B}C$$

# Mapas de Karnaugh: Ejemplo

| A | B | C | D | F |
|---|---|---|---|---|
| 0 | 0 | 0 | 0 | **0** |
| 0 | 0 | 0 | 1 | **1** |
| 0 | 0 | 1 | 0 | **1** |
| 0 | 0 | 1 | 1 | **1** |
| 0 | 1 | 0 | 0 | **0** |
| 0 | 1 | 0 | 1 | **1** |
| 0 | 1 | 1 | 0 | **1** |
| 0 | 1 | 1 | 1 | **0** |
| 1 | 0 | 0 | 0 | **1** |
| 1 | 0 | 0 | 1 | **1** |
| 1 | 0 | 1 | 0 | **1** |
| 1 | 0 | 1 | 1 | **1** |
| 1 | 1 | 0 | 0 | **1** |
| 1 | 1 | 0 | 1 | **1** |
| 1 | 1 | 1 | 0 | **1** |
| 1 | 1 | 1 | 1 | **1** |

## Solución 2

| | $\bar{C}\bar{D}$ 00 | $\bar{C}D$ 01 | $CD$ 11 | $C\bar{D}$ 10 |
|---|---|---|---|---|
| $\bar{A}\bar{B}$ 00 | 0 | 1 | 1 | 1 |
| $\bar{A}B$ 01 | 0 | 1 | 0 | 1 |
| $AB$ 11 | 1 | 1 | 1 | 1 |
| $A\bar{B}$ 10 | 1 | 1 | 1 | 1 |

Salida

$$F(A,B,C) = A + C\overline{D} + \overline{C}D + \overline{B}D$$

# Condiciones no importa

| A | B | C | S |
|---|---|---|---|
| 0 | 0 | 0 | 1 |
| 0 | 0 | 1 | X |
| 0 | 1 | 0 | 0 |
| 0 | 1 | 1 | 0 |
| 1 | 0 | 0 | X |
| 1 | 0 | 1 | 1 |
| 1 | 1 | 0 | 1 |
| 1 | 1 | 1 | 0 |

| | $\bar{B}\bar{C}$ 00 | $\bar{B}C$ 01 | $BC$ 11 | $B\bar{C}$ 10 |
|---|---|---|---|---|
| $\bar{A}$ 0 | 1 | X | 0 | 0 |
| $A$ 1 | X | 1 | 0 | 1 |

$$F(A,B,C) = \overline{B} + A\overline{C}$$

# Ejercicio

Un número binario de 4 bits se representa como $A_3$ $A_2$ $A_1$ $A_0$ , $A_0$ es el LSB. Diseñe un circuito lógico que produzca una salida ALTA siempre que el número binario sea mayor que 0010 y menor que 1000.

| A3 | A2 | A1 | A0 | F |
|---|---|---|---|---|
| 0 | 0 | 0 | 0 | |
| 0 | 0 | 0 | 1 | |
| 0 | 0 | 1 | 0 | |
| 0 | 0 | 1 | 1 | |
| 0 | 1 | 0 | 0 | |
| 0 | 1 | 0 | 1 | |
| 0 | 1 | 1 | 0 | |
| 0 | 1 | 1 | 1 | |
| 1 | 0 | 0 | 0 | |
| 1 | 0 | 0 | 1 | |
| 1 | 0 | 1 | 0 | |
| 1 | 0 | 1 | 1 | |
| 1 | 1 | 0 | 0 | |
| 1 | 1 | 0 | 1 | |
| 1 | 1 | 1 | 0 | |
| 1 | 1 | 1 | 1 | |

| | | | | |
|---|---|---|---|---|
| | | | | |
| | | | | |
| | | | | |
| | | | | |
| | | | | |